39 165 000 **UNISET ELEMENT FOR WC**

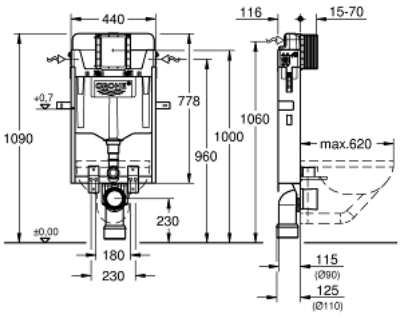

PRODUCT DESCRIPTION

- with flushing cistern GD 2, 6 - 9 l
- 778 x 440 x 116 mm
- for single installation
- 2 WC fixing bolts
- distance of fixing bolts 180/230 mm
- fixing device for ceramic
- outlet bend Ø 90 mm
- reducer Ø 90/110 mm
- inlet and outlet connecting set
- flushing cistern GD 2, 6 - 9 l, containing following features:
- adjustment ex factory 6 l and 3 l
- pneumatic discharge valve offering 3 modes of operation: dual flush or start/stop or single flush
- water supply from left/right/back or top
- low noise (group I acc. to German Noise Specification)
- cistern insulated against condensation
- ½" angle valve with push fit flexible hose union
- no tools required for the installation of the inspection shaft incl. protection during construction phase
- for vertical or horizontal use
- preparation for shower toilets with additional accessory 40 899 000 (sold separately)
- for mounting of small flush plates please order revision shaft 40 911 000 (sold separately)

39 165 000 **UNISET ELEMENT FOR WC**

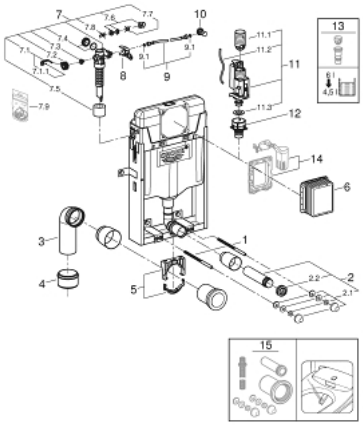

SPARE PARTS, September 2014 – spareParts.validDate.now

1: Threaded bolt (Order-nr. 4276400M)

2: WC inlet and outlet connecting set (Order-nr. 37311K00)

2.1: Basin fastening (Order-nr. 43511SH0)

2.2: Connector (Order-nr. 37119000)

3: Reducer (Order-nr. 42242000)

4: PP-outlet bend Ø 90 mm (Order-nr. 42327000)

5: Support for outlet bend (Order-nr. 42243000)

6: Inspection shaft (Order-nr. 66783000)

7: Filling valve (Order-nr. 37095000)

7.1: Lever (Order-nr. 43734000)

7.1.1: Seal (Order-nr. 4377000M)

7.2: Valve head (Order-nr. 43536000)

7.3: Membrane (Order-nr. 4375800M)

7.4: Screw cap (Order-nr. 43735000)

7.5: Valve FLOAT, 5 pcs. (Order-nr. 4379100M)

7.6: Set of seals (Order-nr. 43722000)*

8: Support device (Order-nr. 42246000)

9: Tube (Order-nr. 42397000)

9.1: Sealing washer (Order-nr. 0319100M)

10: Angle valve (Order-nr. 42343000)

11: Dual Flush discharge valve AV1 (Order-nr. 42320000)

11.1: extension for Overflow pipe (Order-nr. 42313000)

11.2: Pneumatic hose (Order-nr. 42319000)

11.3: Seal (Order-nr. 42310000)

12: Valve seat for GD2 (Order-nr. 42315000)

13: 4.5 l adapter for GD2 (Order-nr. 42333000)*

14: Retro-fit set (Order-nr. 38796000)*

15: Retrofit kit for shower toilets Sensia Arena and IGS (Order-nr. 40899000)*

* Optional accessories